Technical Data

Staple type: N18 Staples
18 GAUGE STAPLES NARROW CROWN

Wire Ø: 1.17mm

Suitable for the following tools:

Paslode S150 N18

Staple lengths available: 13mm – 38mm
Staples per strip: 100

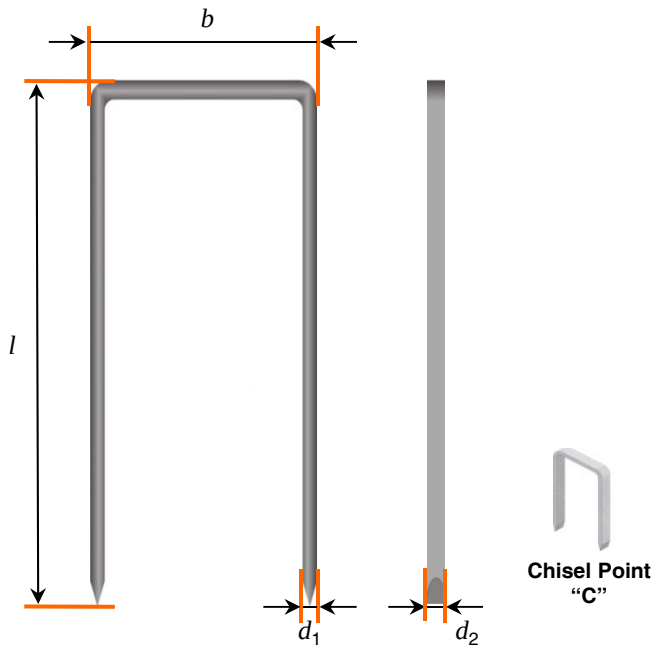

CORROSION PROTECTION

Finish	Usage Environment	Label Colour on Packaging
Zinc Galv 1-3µm	INDOOR	Blue

STAPLE PROPERTIES / DIMENSIONS

Tensile strength of wire:	min 900 N/mm²
Nominal diameter (d):	1.17mm
Flattened wire dimension:	(d_1): 1.00mm (d_2): 1.25mm
Outside crown width (b):	5.20mm
Strip length:	approx 125.50mm
Standard point:	"C"
Coated leg length:	Full

STAPLE LENGTHS AVAILABLE*

Finish	Lengths Available *Other lengths on request
Zinc Galv 1-3µm	13mm, 16mm, 19mm, 22mm, 25mm, 29mm, 32mm, 35mm, 38mm

Paslode is a brand of the ITW Group. ITW reserves the right to change specification without notice. All design using this data should be carried out by a qualified structural engineer, subject to relevant National and European standards or regulations.

Issue date 06.09.2013 © ITW